REQUIRED CONTAMINATION CLASS	ISO 4406 class 20/18/15
OPERATING TEMPERATURE RANGE	-20° to +90°C

INLET	DIRECTION
A	RIGHT
B	LEFT

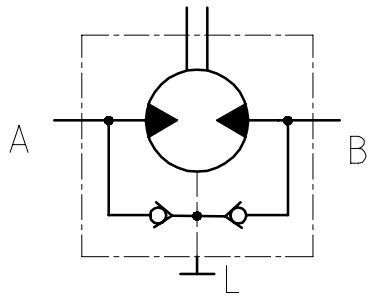

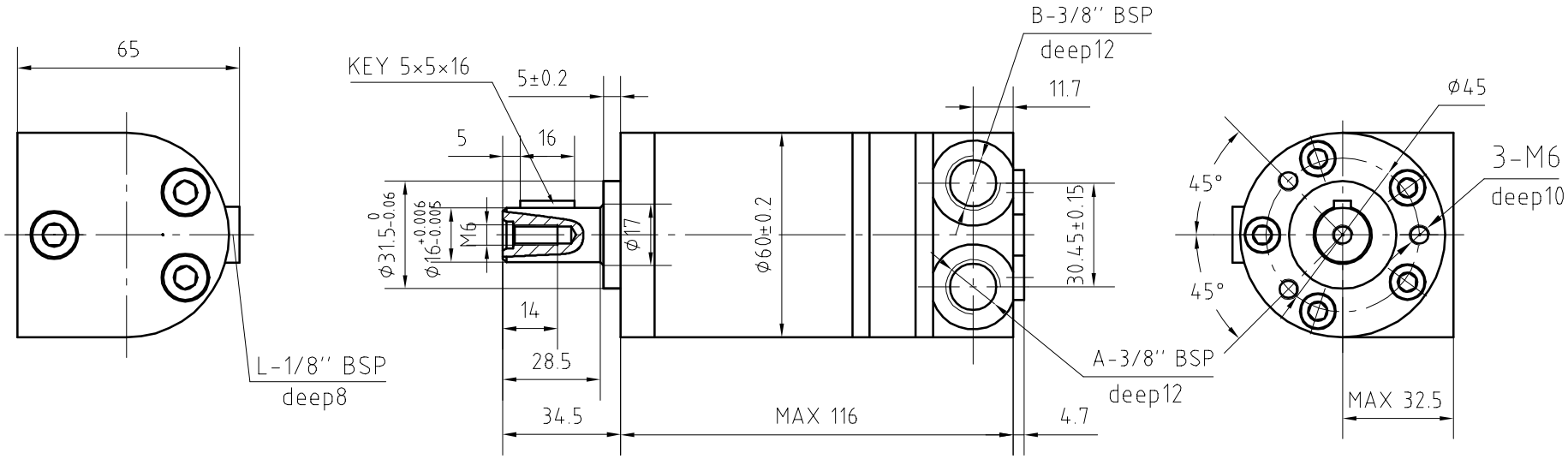

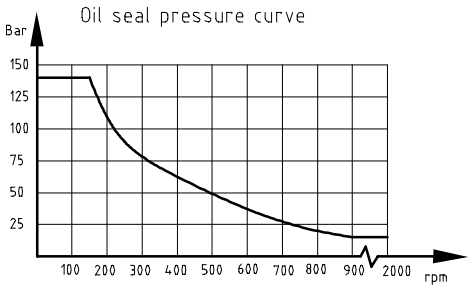

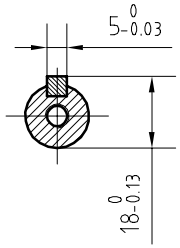

PRESSURE(bar)		
CONTINUOUS	INTERMITTENT	PEAK
100	140	160

Type:Gerotor

Max allowed back-pressure or drain pressure: 30bar
Max allowed torque: 40Nm
Max speed: 630rpm

PAINTING COLOUR: BLACK
PAINTING THICKNESS RANGE: 0.04mm-0.06mm
SHAFT: MAGNESIUM PHOSPHATED

forward products	Date 09.11.2019
Nom.Displacement 32cc/rmp	
FP-MM032-3H-CY16-01	